Village of Colfax
Village Board
Regular Meeting Agenda
Monday, February 13, 2017
Village Hall, 613 Main Street
7:00 p.m.

1. Call to Order

2. Roll Call

3. Public Appearances

4. Consent Agenda
   a. Minutes
      i. Regular Board Meeting Minutes, January 23, 2017
      ii. Joint Village Board/Personnel Committee Minutes, January 30, 2017

   b. Training Requests
      i. Rand Bates & Don Logslett – Rural Water 29th Annual Technical Conference - March 28 - 31, 2017 – Plover WI
      ii. Rand Bates, Don Logslett & Tim Rundle – 2017 Municipal Training, Eau Claire, WI – March 15, 2017

   c. Facility Rental - none

   d. Licenses
      i. Operator's License- February 13, 2017 to June 30, 2017 -Sally Steinke – A Little Slice of Italy
      ii. Operator's License- February 13, 2017 to June 30, 2017 – Davina Brenden – Buck Snort Bar & Grill
      iii. Domestic Chicken License – February 13, 2017 to June 30, 2017 – Sarah Teele – 610 E. River Street

5. Communications – Village President

6. Consideration Items
   a. Cross-Connection Control Services Proposal- Hydro Corp
   b. 2017 Board of Review Training Selection

7. Review/Approval – Bills –January 23, 2017 – February 12, 2017

8. Committee/Department Reports – (NO ACTION)
   a. Rep. Rob Summerfield - Budget Listening Session – February 20, 2017 2:30 pm to 4 pm
   b. Administrator-Clerk-Treasurer Update
   c. Public Works Task List

9. Adjourn

Any person who has a qualifying disability as defined by the American With Disabilities Act that requires the meeting or materials at the meeting to be in an accessible location or format must contact: Lynn Niggemann, Administrator-Clerk-Treasurer, 613 Main Street, Colfax, WI (715) 962-3311 by 2:00 p.m. the Friday prior to the meeting so that any necessary arrangements can be made to accommodate each request.

It is possible that members of and possibly a quorum of members of the governmental bodies of the municipality may be in attendance at the above-stated meeting to gather information; no action will be taken by any governmental body at the above-stated meeting other than the governmental body specifically referred to above in this notice.

Regular Village Board Meeting – January 23, 2017

On January 23, 2017, the Village Board/Personnel Committee meeting was held at 7:00 p.m. at the Village Hall, 613 Main Street, Colfax, WI. Members present: Trustees Halpin, Davis, Wolff, Schieber, Rihn, Burcham and President Gunnufson. Others present included Mark Johnson, Rescue Squad Director Knutson, Public Works Director Bates, Police Chief Anderson, Administrator-Clerk-Treasurer Niggemann and LeAnn Ralph with the Messenger.

Public Appearances –none.

Minutes- Regular Board Meeting Minutes, January 9, 2017 - A motion was made by Trustee Halpin and seconded by Trustee Rihn to approve the January 9, 2017 minutes. Voting For: Trustees Burcham, Rihn, Schieber, Wolff, Davis, Halpin and Gunnufson. Voting Against: none. Motion carried.

Training Requests-
Chief Anderson – 2017 WI Police Chief Leadership Conference – February 12, 2017 to February 15, 2017 – A motion was made by Trustee Halpin and seconded by Trustee Wolff to approve Chief Anderson's request to attend the 2017 WI Police Chief Leadership Conference. Voting For: Trustees Halpin, Davis, Wolff, Schieber, Rihn, Burcham and Gunnufson. Voting Against: none. Motion carried.

Rand Bates & Tim Rundle – 2017 Utility conference – February 17, 2017 – A motion was made by Trustee Davis and seconded by Trustee Rihn to approve the 2017 Utility conference for Bates and Rundle. Voting For: Trustee Rihn, Schieber, Wolff, Davis, Halpin and Gunnufson. Voting Against: Trustee Burcham. Motion carried.

Licenses- Temporary Class "B"/"Class B" Retailer's License – Colfax Women's Club – January 28, 2017 – Wine Craft Beer Tasting – A motion was made by Trustee Schieber and seconded by Trustee Halpin to approve the license for the Wine and Craft Beer Tasting for January 28, 2017. Voting For: Trustees Halpin, Davis, Wolff, Schieber, Rihn, Burcham and Gunnufson. Voting Against: none. Motion carried.

Communications – Village President – Scott Gunnufson welcomed Tim Rundle to the Village of Colfax and the Public Works Department. Effective February 1, 2017 Tim will begin full-time employment.

Sidewalk Repairs – 510 E River St. – Request for 40% reimbursement - A motion was made by Trustee Halpin and seconded by Trustee Wolff to approve the reimbursement of $120 to Dave Hovre for the Village portion of sidewalk assessment request at 510 E. River St. Voting For: Trustees Burcham, Rihn, Schieber, Wolff, Davis, Halpin and Gunnufson. Against: none. Motion carried.

Anytime Fitness agreement – February 1, 2017 to January 31, 2018 – A motion was made by Trustee Rihn and seconded by Trustee Halpin to approve the Anytime Fitness agreement for

2017-2018. Voting For: Trustees Halpin, Davis, Wolff, Schieber, Rihn, Burcham and Gunnufson. Voting Against: none. Motion carried.

Rescue Squad Computer Purchase Request – 24/7 Telcom – Knutson explained that he rotates his computer out approximately every three years. His computer will be transfered to the other staff computers allowing the oldest computer to be discarded. In 2016, the computer budget was used to purchase a tough book so that means each of the computers will be an additional year older when being replaced. 24/7 Telcom has provided an estimate for a new computer, screen and set up with data transfer at approximately $1,444.99 with one hour billed for setup and data transfer. The setup is a variable price of $75 per hour.

A motion was made by Trustee Davis and seconded by Trustee Rihn to approve the computer purchase through 24/7 Telcom. Voting For: Trustees Burcham, Rihn. Schieber, Wolff, Davis, Halpin and Gunnufson. Voting Against: none. Motion carried.

Rescue Squad Purchase Request – Ambulance Tires – Knutson provided a quote from All Season Tire Pros for $1,274.40 and one from Bauer Built for $1,321.76. A motion was made by Trustee Halpin and seconded by Trustee Wolff to approve the purchase of the ambulance tires for Medic 7 through All Season Tire Pros in the amount of $1,274.40. Voting For: Trustee Halpin, Davis Wolff, Schieber, Rihn, Burcham and Gunnufson. Voting Against: none. Motion carried.

Respirator Fit Tester Purchase Request- The Dunn County Fire Chiefs Association has received a Dunn Energy Grant to purchase a Respirator Fit Tester. The Fire and EMS departments have been given the option to buy-into a shared program with Dunn County Fire Chiefs Association for a one time cost of approximately $876.30. This cost may go down if some of the other departments get approval to participate. The cost of the TSI Porta Count Pro 8038, 5 year warranty, three types of adapters and three types of ISI Fit Test Masks totals $19,277.60. The Dunn Energy Grant amount is $9,638.30 which brings the total cost to $9,639.30.

A motion was made by Trustee Halpin and seconded by Trustee Rihn to approve the buy-in for the Respiration Fit Tester with the estimated cost to be a one-time cost of $876.30 which will be purchased out of the small equipment budget. Voting For: Trustees Burcham, Rihn, Schieber, Wolff, Davis, Halpin and Gunnufson. Voting Against: none. Motion carried.

Review Parking Ordinances – Sec. 10-1-20 Traffic and Parking – Originally Sec. 10-1-27 (d) stated that "Throughout the year and the hours of 3:00 a.m. and 6:00 a.m., no parking shall be allowed on River Street between Pine street and Cedar Street. **In 2011**, the ordinance for this section was rewritten so that (a) included restriction for the time period between November 1 and May 1 and (b) stated Throughout the year, there shall be no parking on (i.) Main Street between 2:30 a.m. and 6:00 a.m. and (ii.) River Street from Pine Street to Cedar Street between 12:00 a.m. and 6:00 a.m. **In 2016, Sec. 10-1-29** (a) Parking Limits (2) was added stating that there would be a Two (2) hour parking limit on the south side of River Street between Highway 40/Main Street and the alley to the east of property at 310 rivers Street between the hours of 8 a.m. and 6:00 p.m.

The Street Maintenance ordinance was necessary due to snow removal issues and concerns. To avoid similar problems in the future the following modifications will be made.

Repeal and recreate as follows for Sec. 10-1-27 – Street Maintenance Parking Restrictions to:
(a) Between November 1 and May 1:

I. parking shall be allowed on even house numbered side of streets on even calendar numbered days and on odd house numbered side of streets on odd calendar numbered days.

II. even and odd parking shall be determined by the date starting at 12:00 a.m. that a parking ticket would be issued.

III. River Street from Pine Street to Cedar Street between 12:00 a.m. and 6:00 a.m.

(b) Throughout the year, there shall be no parking on

I. Main Street between 2:30 a.m. and 6:00 a.m.

A motion was made by Trustee Rihn and seconded by Trustee Halpin to recreate Ordinance Section. 10-1-27- Street Maintenance Parking Restrictions as indicated. Voting For: Trustees Halpin, Davis, Wolff, Schieber, Rihn, Burcham and Gunnufson. Voting Against: none. Motion carried.

Directly related to the parking ordinance is the permit to park on River Street from Pine Street to Cedar Street. In the past, the Village worked with the landlord at 601 Main Street regarding their tenant parking. The parking was granted by the Police Department through an application process with the tenant(s). The Police Department will update the application to include the changes to the ordinance as well as request personal data that would allow the Village to contact permit holders in the case of an emergency. The Board members gave suggested changes for the application.

A motion was made by Trustee Rihn and seconded by Trustee Wolff to update the permit application and parking permits. Voting For: Trustees Burcham, Rihn, Schieber, Wolff, Davis, Halpin and Gunnufson. Voting Against: none. Motion carried.

Donation for the Evergreen Cemetery from Muriel Larson – Possible motion to accept – The Board members discussed the use of the $1,000 donation from Muriel Larson at the Evergreen Cemetery. A motion was made by President Gunnufson and seconded by Trustee Halpin to use the $1,000 donation as part of the spreading garden funds and to have a plaque made to recognize her contributions. Voting For: Trustees Halpin, Davis, Wolff, Schieber, Rihn, Burcham and Gunnufson. Voting Against: none. Motion carried.

Update on the financing information for the Kamstrup meters – DSG has updated their finance option for the $82,075 to include the most recent interest rate of 3.358%. Other interest rates received from Bremer Bank and Dairy State Bank are 3.94% and 2.45% respectively.

DSG would give a discount if the invoice was paid in full net 10 days of 2%. The savings would be $1,641.50. An ideal plan would be to pay the amount that was budgeted for 2016 for the

meters, pay the invoice in net 10 to get the discount and then finance the balance or borrow funds from the General Fund. These items will be discussed further once the Village receives PSC approval to move forward with the meter change out.

Review/Approval – Bills – January 9, 2017 – January 22, 2017 – A motion was made by Trustee Halpin and seconded by Trustee Rihn to approve the bills for January 9 to 22, 2017. Voting For: Trustees Halpin, Davis, Wolff, Schieber, Rihn, Burcham and Gunnufson. Voting Against: none. Motion carried.

A motion was made by Trustee Schieber and seconded by Trustee Wolff to postpone the Closed Session topics and move the employee performances to a Joint Board/Personnel Committee meeting on January 30, 2017 at 6:00 p.m. At the meeting, the hiring section of the Employee Handbook will be discussed. Voting For: Trustees Burcham, Rihn, Schieber, Wolff, Halpin and Gunnufson. Abstained: Trustee Davis. Voting Against: none. Motion carried.

Adjourn: A motion was made by Trustee Halpin and seconded by Trustee Rihn to adjourn the Village Board meeting at 8:50 p.m. A voice vote was taken with all members voting yes. Motion carried.

_____

Scott Gunnufson, Village President

Attest: Lynn Niggemann
Administrator-Clerk-Treasurer

Joint Village Board/Personnel Committee Meeting – January 30, 2017

On January 30, 2017, the Village Board/Personnel Committee meeting was held at 7:00 p.m. at the Village Hall, 613 Main Street, Colfax, WI. Members present: Trustees Burcham, Rihn, Schieber, Wolff, Halpin and President Gunnufson. Excused: Trustee Davis. Others present included Administrator-Clerk-Treasurer Niggemann. No media was present

Public Appearances –none.

Employee Handbook – discuss the Recruitment and Employment section - Hiring - A motion was made by Trustee Wolff and seconded by Trustee Schieber to change paragraph two of the Hiring section in the employee handbook as listed below and all hires made prior to this meeting will stand as they are. Voting For: Trustees Burcham, Rihn, Schieber, Wolff, Halpin and Gunnufson. Voting Against: none. Motion carried.

Hiring section of the employee handbook-
The ~~Department Head and~~ Administrator-Clerk-Treasurer **and the Department Head** shall do the screening**,** ~~and~~ interviewing **and hiring** of applicants for Non Department Head/Supervisor positions. The Administrator-Clerk-Treasurer will ~~make a recommendation to the Village Board for final approval~~ **communicate the employee hire to the Village Board**.

Closed Session - A motion was made by Trustee Halpin and seconded by Trustee Rihn to convene into closed session pursuant to WI Statutes 19.85(1) (c) considering the employment, promotion, compensation or performance evaluation data of any public employee over which the governmental body has jurisdiction or exercises at 6:25 p.m.

a. Public Works Employee Yearly Performance Evaluation
b. Public Works Director Yearly Performance Evaluation
c. Rescue Director Yearly Performance Evaluation
d. Administrator-Clerk-Treasurer Yearly Performance Evaluation
e. Discuss/consider wages/salaries of Village employees

Voting For: Trustees Halpin, Wolff, Schieber, Rihn, Burcham and Gunnufson. Against: none. Motion carried.

Open Session – Motion to convene into open session to take any action resulting from the closed session at 8:53 p.m.

a. Public Works Employee Yearly Performance Evaluation
b. Public Works Director Yearly Performance Evaluation
c. Rescue Director Yearly Performance Evaluation
d. Administrator-Clerk-Treasurer Yearly Performance Evaluation
e. Discuss/consider wages/salaries of Village employees

The Village Board unanimously agreed grant the following raises 0%, 1%, 1%, 1.75% for Public Works Employee, Public Works Director, Rescue Squad Director and Administrator-Clerk-Treasurer respectively. 30 hour Rescue staff, Tim Swenson and Scott Johnson were granted 1.5% and 1% raise respectively.

Adjourn: A motion was made by Trustee Halpin and seconded by Trustee Schieber to adjourn Village Board meeting at 8:55 p.m. A voice vote was taken with all members voting yes. Motion carried.

_____
Scott Gunnufson, Village President

Attest: Lynn Niggemann
Administrator-Clerk-Treasurer

Meeting / Continuing Education
Travel / Meeting Request Form

Name Rand Bates - Don Logslett
Date 2-7-17

Position Director / Streets
Department Public Works
Estimated Costs 1,114.

Date(s) of meeting 3-28-31-2017

Employee is / (not) required to attend (circle one)

Name of Requested meeting Rural Water 29th Annual Technical Conference

How will this improve your ability to perform your job? Learn new and better techniques in the Changing public Works Department

What alternatives are there to attending this meeting? (In- house resources, literature review, participation in meetings closer to Eau Claire, etc.) Taking multiple classes to obtain the credits needed for sewer and water license. Usually in plover Wi.

How will you share what you have learned with others?

Please include any additional comments on the back of this form

Expense Estimate:	Requested 2-7-17 Approved
Tuition / Registration $170.00 x 2 = $340.00	*Are others attending this meeting YES / NO
Mileage / Airfare Own vehicle - None	(If yes, list names)
Lodging $387.00 x 2 = $774.00	
*Would like the Registration Fee Miscellaneous pre paid and mailed with your registration YES / NO	
Total $1114.00	
Time Request:	Requested 2-7-17 Approved
Number of days absent:	
From Work Setting 3 1/2	
Vacation	
Paid Conference Time X	
Absent Without Pay (own time)	
Other	

A COPY OF THE MEETING DESCRIPTION AND AGENDA MUST BE ATTACHED TO THIS REQUEST

Rand Bates Lynn Heggemann 2-7-17

Supervisor Date

RURAL WATER 29th ANNUAL TECHNICAL CONFERENCE PRE-CONFERENCE AGENDA

WRWA
Wisconsin Rural Water Association

Separate Registration Required

Tuesday, March 28		
8:30-5:00	WRWA Committee Meetings- Board Room B	
PRE-CONFERENCE WORKSHOPS		
9:00 - Noon	WATER OPERATION & MAINTENANCE Ballroom - 1	WASTEWATER OPERATION & MAINTENANCE Ballroom - 2
	Metering: Past, Present, and Future Rich Gardner – DSG/Kamstrup	***Infrared Drying – A New Alternative to Biosolids*** Chris Moarn – BluTEQ Infrared Solutions
	Asset Management: GIS Beyond Mapping Kelly Olson, P.E. – HD Supply Adam Hagee - iWater	***Update: Condition Assessment Tools & Trenchless Rehabilitation Technologies*** Paul Pasko III, P.E. – Short Elliott Hendrickson
	Vents, Overflows, and Hatches: Your Annual Tank Inspection Jana Nyhagen – Short Elliot Hendrickson	***How Bio-Augmentation Can Benefit Your System*** Terry Maier, President – Team Laboratory Chemical Corp.
12:00	LUNCH – Ballroom Area	
1:00 - 3:00	***Maintaining Gate and Butterfly Valves*** Owen Keenan P.E. – ME Simpson	***Silver Creek Adaptive Management Pilot Project*** Jeff Smudde, Erin Wilcox – NEW Water
	Seeing Beneath the Surface/Line Tracing Doug Gries – Ferguson/Davies	***Phosphorus Limbo: How Low Can You Go?*** Leo Kucek – Applied Technologies

CONFERENCE AGENDA

	Wednesday, March 29
8:00	Registration – La Crosse Center South Lobby
9:00	**Opening Session** – North Hall- N 3,4 ▪ **Welcome** Dave Lawrence, WRWA Executive Director Tim Kabat, La Crosse Mayor ▪ **Opening Speaker**- TBA ▪ **WRWA Annual Awards Presentations**
*	**Exhibit Hall opens following Opening Session – South Hall & Arena**
11:30	Lunch – South Hall Exhibit Area
1:00	**Annual Membership Meeting** - North Hall N 3,4
2:00-5:00	**Regulation Update Session** - North Hall N 3,4 ▪ ***WI Public Service Commission Regulatory Update*** ▪ ***DNR Regulatory Updates*** ▪ ***Rural Development***
5:00	**Exhibitor Hospitality** – South Hall & Arena

Thursday, March 30

8:00	Registration – La Crosse Center South Lobby			
	Room – S 2	Room – S 1	Room – N 2	Room – N 1
8:00	***What's New with Safety in Wisconsin and Why Do We Have Backover Incidents*** Vince Matarrese Adv. Safety Technology	***Public Funding-Current Trends and Successful Strategies*** Kurt R. Muchow Vierbicher Associates	***Understanding Foaming and Nitrification in Wastewater Plants*** Kevin Ripp - Aquafix	***Water Supply in the Public Eye: Good reads for Water Professionals*** Susan Wojtkiewicz, P.E. Short Elliot Hendrickson
9:30	Exhibit Hall Opens – South Hall & Arena			
10:30	***The Big Payback – The Importance of Large Meter Analytics*** Jacob Jasperson Badger Meter	***Writing an RFP – The Do's and Don'ts*** Sarah Nunn - Lynch & Associates	***The Nutrient Solution – Clearas Water Recovery and ABNR Technology in Wisconsin*** Garrett Pallo, Vice President Clearas Water Recovery	***Water Tower Agreements: Don't Let the Cell Phone Company Get the Upper Hand*** Anita Gallucci Boardman & Clark LLP
11:30	Lunch – South Hall Exhibit Area			
12:00	Water Taste Test- Lower Lobby			
	Room – N 4	Room – N 3	Room – N 2	Room – N 1
1:00	***All things Chlorine*** Jim Schuth Hach Company	***Cellular Connectivity + Cloud Platform = Robust SCADA Replacement*** Bruce Butler – Werner Electric Brian Rosema – LEC Jeffrey Heckman – US Cellular	***A Plain English Guide to the Multi-Discharger Variance for Phosphorus*** Pat Morrow, P.E. MSA Professional Services	***Wisconsin Deferred Compensation (WDC) Program Overview*** Shawn Bresnahan, Pam Hammond - WI Deferred Compensation
2:00	Exhibit Hall Closes			
2:00	***Wisconsin DNR 5 Year Water Tank Inspections*** James Orr Dixon Engineering	***Can You Afford Water Conservation?*** Patrick Planton – Short Elliot Hendrickson Denise Schmidt – WI PSC	***Level Measurement Made Easy and Maintenance Free*** Steve McCuskey Vega Americas	***WRS Benefits*** Lance Singleton WI Dept. of Employee Trust Funds
3:00	***How to Keep Your GIS System Up-To-Date Without Breaking the Bank*** Gary Randle, Matt Donohue Lynch & Associates	***Streamlining Operations, Improving Data Management, Empowering Staff & Making Better Field Decisions*** Ryan Eckdale-Dudley – Symbiont Kevin Freber – Watertown Utility	***Monoform Manhole Rehabilitation*** Matt Huston Hydro-Klean	***WRS Benefits*** Lance Singleton WI Dept. of Employee Trust Funds
6:00	Banquet – South Hall – Sportsman's Raffle Drawing and Prize Presentation			

Friday, March 31

	Room – N 1	Room – N 2
8:00	***Electrical Safety in Water and Wastewater Treatment Facilities*** Scott Mahnke - McMahon	***Abbotsford's Innovative Wastewater Treatment Facility*** Todd Medenwaldt – City of Abbotsford
9:00	***Drones and Water Towers Plus*** Shawn Mulhern or Michael Olesen – KLM Engineering	***Rhinelander-Downtown Turned Upside Down*** Mark Barden, P.E. – Town and Country Engineering
10:00	***Mobil GIS Applications with ArcGIS Online*** Todd Halvorson, GISP – MSA Professional Services	***An Economic Variance for Compliance with Phosphorus Limits*** Bill Weaver, P.E. – MSA Professional Services

CEC's	Tuesday	Wednesday	Thursday	Friday	Total Water/Wastewater	PDH
Wisconsin & Minnesota	5	6	6	3	20	20
Illinois	5	3	5	3	16	

RURAL WATER 29th ANNUAL TECHNICAL CONFERENCE REGISTRATION MARCH 28 – 31, 2017

ONE FORM PER PERSON

WRWA
Wisconsin Rural Water Association

Full Name: Rand Bates ***DNR Op. Cert. No.** 35661
System / Company: Village of Colfax
Address: 613 Main St **City:** Colfax **State:** Wi **Zip:** 54730
Telephone: (715) 962-3311 **Fax:** (715) 962-4441 **Email:** colfaxdpw@colfaxdpw.com

DAILY REGISTRATION **(ALL ACCESS to classes and/or exhibit hall)**

TUESDAY, MARCH 28, 2017 – with Morning Break/Lunch

___WRWA Member $65
___Non-Member $80
$_____

WEDNESDAY, MARCH 29, 2017 – with Morning Break/Lunch

___WRWA Member $100
___Non-Member $130
$_____

THURSDAY, MARCH 30, 2017 – with Morning Break/Lunch/Banquet

___WRWA Member $120
___Non-Member $160
$_____

FRIDAY, MARCH 31, 2017 – with Morning Break

___WRWA Member $50
___Non-Member $70
$_____

BUNDLE REGISTRATION **(ALL ACCESS to classes and/or exhibit hall)**

PLEASE MARK THE DAYS YOU WILL BE ATTENDING

✓ **WEDNESDAY, MARCH 29, 2017 – with Morning Break/Lunch**

✓ **THURSDAY, MARCH 30, 2017 – with Morning Break/Lunch/Banquet**

✓ **FRIDAY, MARCH 31, 2017 – with Morning Break**

✓ WRWA Member $170
___Non-member $210
$ 170.00

EXHIBIT HALL PASS WITH LUNCH (Spouses, Students, Retirees only (with no credit slip)

___Wednesday – 3/29 $30
___Thursday – 3/30 $30 $ _____

BANQUET Print full name of guest(s): _____

___Thursday – 3/30 $50 $ _____

***** ON-SITE REGISTRATION – Add $25 to cost shown**

TOTAL ENCLOSED: $ 170.00

***FOR WRWA to SUBMIT YOUR CEU'S to the DNR, YOU MUST INCLUDE YOUR CERTIFICATION NUMBER ABOVE**

Cancellations/Changes and Refunds: No later than March 6, 2017. After that date, fees are non-refundable. All refunds will be processed after the conference. Substitutions are allowed at no charge.

Please check appropriate box: ☐ Check enclosed ☐ Paid by Credit Card

Please mail completed registration form with payment to: WRWA, 350 Water Way, Plover, WI 54467
Make checks payable to: WRWA

To pay by Credit Card: (Visa, Discover, MasterCard, E-Check, Debit Card Only) Go to www.wrwa.org
**** MUST fax completed form(s) to 715-344-5555 or email to wrwa@wrwa.org*

QUESTIONS: (715)344-7778 - Program and lodging information: www.wrwa.org

RURAL WATER 29th ANNUAL TECHNICAL CONFERENCE REGISTRATION

MARCH 28 – 31, 2017

ONE FORM PER PERSON

WRWA
Wisconsin Rural Water Association

Full Name: Don Logslett ***DNR Op. Cert. No.** 24774
System / Company: Village of Colfax
Address: 613 Main st **City:** Colfax **State:** Wi **Zip:** 54730
Telephone: (715) 962-3311 **Fax:** (715) 962-4441 **Email:** Colfaxdpw@colfaxdpw.com

DAILY REGISTRATION **(ALL ACCESS to classes and/or exhibit hall)**

TUESDAY, MARCH 28, 2017 – with Morning Break/Lunch

___WRWA Member $65
___Non-Member $80
$_____

WEDNESDAY, MARCH 29, 2017 – with Morning Break/Lunch

___WRWA Member $100
___Non-Member $130
$_____

THURSDAY, MARCH 30, 2017 – with Morning Break/Lunch/Banquet

___WRWA Member $120
___Non-Member $160
$_____

FRIDAY, MARCH 31, 2017 – with Morning Break

___WRWA Member $50
___Non-Member $70
$_____

BUNDLE REGISTRATION **(ALL ACCESS to classes and/or exhibit hall)**

PLEASE MARK THE DAYS YOU WILL BE ATTENDING

✓ **WEDNESDAY, MARCH 29, 2017 – with Morning Break/Lunch**

✓ **THURSDAY, MARCH 30, 2017 – with Morning Break/Lunch/Banquet**

✓ **FRIDAY, MARCH 31, 2017 – with Morning Break**

✓ WRWA Member $170
___Non-member $210
$ 170.00

EXHIBIT HALL PASS WITH LUNCH (Spouses, Students, Retirees only (with no credit slip)

___Wednesday – 3/29 $30
___Thursday – 3/30 $30 $ _____

BANQUET Print full name of guest(s): _____

___Thursday – 3/30 $50 $ _____

***** ON-SITE REGISTRATION – Add $25 to cost shown**

TOTAL ENCLOSED: $ 170.00

***FOR WRWA to SUBMIT YOUR CEU'S to the DNR, YOU MUST INCLUDE YOUR CERTIFICATION NUMBER ABOVE**

Cancellations/Changes and Refunds: No later than March 6, 2017. After that date, fees are non-refundable. All refunds will be processed after the conference. Substitutions are allowed at no charge.

Please check appropriate box: ☐ Check enclosed ☐ Paid by Credit Card

Please mail completed registration form with payment to: WRWA, 350 Water Way, Plover, WI 54467
Make checks payable to: WRWA

To pay by Credit Card: (Visa, Discover, MasterCard, E-Check, Debit Card Only) Go to www.wrwa.org
**** MUST fax completed form(s) to 715-344-5555 or email to wrwa@wrwa.org*

QUESTIONS: (715)344-7778 - Program and lodging information: www.wrwa.org

Name: Don Logslett
Name: Tim Rundle

Meeting / Continuing Education
Travel / Meeting Request Form

Name Rand Bates
Date 2-7-17

Position Director / Streets / Laborer
Department Public Works
Estimated Costs 0

Date(s) of meeting 3-15-17

En ployee is / (not) required to attend (circle one)

Name of Requested meeting 2017 Municipal Training

How will this improve your ability to perform your job? Learn techniques for manhole repair and Repair and maintenance on our fire hydrants.

What alternatives are there to attending this meeting? (In- house resources, literature review, participation in meetings closer to Eau Claire, etc.)

How will you share what you have learned with others? They will be attending also

Please include any additional comments on the back of this form

Expense Estimate:	Requested	Approved
Tuition / Registration 0	*Are others attending this meeting	(YES) / NO
Mileage / Airfare Drive to Eau Claire with old squad car		(If yes, list names)
Lodging None		
*Would like the Registration Fee Miscellaneous pre paid and mailed with your registration YES / NO		
Total 0		
Time Request:	Requested	Approved
Number of days absent:		
From Work Setting Morning Class		
Vacation		
Paid Conference Time X		
Absent Without Pay (own time)		
Other		

A COPY OF THE MEETING DESCRIPTION AND AGENDA MUST BE ATTACHED TO THIS REQUEST

Rand Bates Lynn Reggemann — 2-7-17

Supervisor — Date

FIRST SUPPLY

Waterworks Dept - Eau Claire

2017 Municipal Training

When: Wednesday , March 15th 2017
Where: First Supply – Eau Claire, 596 Cameron St
Conference Room
Times: Registration 7:30am – 8:00am
Classes 8:00am – 12:30pm
Lunch/Questions – Following Classes
RSVP: By Tuesday February 21st via email
glarson@1supply.com or Fax 715-831-4621

Speakers:

Randy Schneider – Manhole Repairing
Rick Myskewitz –Waterous Hydrants
Rich Pawlicki –AY McDonald
Greg Maliszewski – Safety

**Classes Qualify for Municipal Training 4 CEU Credits

July 1, 2016 - June 30, 2017
Application for License to Serve Fermented Malt Beverages and Intoxicating Liquors

Fee - $10.00

To the Clerk of the Village of Colfax Wisconsin:

I hereby apply for a License to serve, from July 1, 2016 to June 30, 2017, inclusive (unless sooner revoked), Fermented Malt Beverages and Intoxicating Liquors, subject to the limitations imposed by Section 125.32(2) and 125.68 (2) of the Wisconsin Statutes and all acts amendatory thereof and supplementary thereto, and hereby agree to comply with all laws, resolutions, ordinances and regulations, Federal, State, or Local, affecting the sale of such beverages and liquors if a license be granted to me.

I certify that I am 56 years of age.

Signature of Applicant

Answer the following questions fully and completely:

Name of Applicant Sally Steinke

Address of Applicant E8584 State Rd 170

Have you been convicted of any felony or of violating any law of the State of Wisconsin or of the United States?

DWI yes

Date of such conviction 10yrs?

Name of Court Menomonie

Nature of offense DWI

Have you been convicted or violating any license law or ordinance regulating the sale of beverages or intoxicating liquors?

NO

Signature of Applicant

STATE OF WISCONSIN,

ss.

Dunn County.

Sally Steinke, being first duly sworn on oath says that he is the person who made and signed the foregoing application for an operator's license; that all the statements made by the applicant are true.

Subscribed and sworn to before me this 11th day of January 2017

Applicant sign here

Sheila Riemer

Notary Public, Dunn County, Wis.

My Comm. expires 8-27-18

SHEILA RIEMER NOTARY PUBLIC STATE OF WISCONSIN

COLFAX POLICE DEPARTMENT

Village of Colfax P.O. Box 417 Colfax, Wisconsin 54730

Supplemental – General License Application

Instructions: Fill in all blanks, if a blank doesn't apply to your situation; fill in with "NA". A $5.00 Investigation Fee is due to the Village of Colfax when submitting this application. The Investigation Fee does not apply to: fermented beer, liquor, or on-off sale licenses. The fee, if applicable, will be instituted by the Village Clerk. Your receipt of this application will be accepted or denied within 72 hours (3 days) by the Colfax Police Department upon receipt of this application. This form is to be filled out in addition to any others required by the Village of Colfax. Any information on this application found to be false will be grounds for non-approval of this application.

NOTE: If any further explanation is needed, please continue on back of application.

Full Name-First, Middle, Last Sally R Bleinke

Business/Organization Name Little Italy

Full Prior Names (nicknames, maiden names, etc. Fawcett, Maves

Date of Birth_____ Place of Birth_____

Sex_____ Race_____ Height_____ Weight_____

Social Security No. _____ Driver's License No._____

Have you ever been arrested for, or convicted of any laws, including traffic? yes

If yes, list offense, date and place occurring. OWI 10yrs?

List prior addresses for the past five years_____

List three personal references, not related to you. Include name, address & phone number

1) Christy Skinner Colfax
2) Dennis Peterson Menomonie
3) Donna Sean Menomonie

Have you ever been a member of the Military Service? NO Discharge? _____

Education- include name of High School, location, grade completed and any training beyond high school.

Boyceville High School Boyceville 12

Chippewa Valley Technical College Eau Claire 2yr certificate

I certify that I am familiar with the laws, ordinances and regulations, and hereby agree, if granted a license, to obey all provisions of such laws. I further certify that all information included in this application is true, accurate and complete to the best of my knowledge.

Signature_____ Date 1/11/17

Official Use Only-Below This Line

Date Received 01/11/2017 Date Approved 01/12/2017 Date Denied_____

Researcher Chief of Police Approving Officer Signature_____

Application For License To Serve Fermented Malt Beverages and Intoxicating Liquors

TO THE COUNCIL OF THE CITY OF MENOMONIE, WISCONSIN:

I hereby apply for a license to serve, from date hereof to **June 30, 20** 17, inclusive (unless sooner revoked), Fermented Malt Beverages and Intoxicating Liquors, subject to the limitations imposed by Section 125.32(2) and 125.68(2) of the Wisconsin Statutes and all acts amendatory thereof and supplementary thereto, and hereby agree to comply with all laws resolutions, ordinances and regulations, Federal, State or Local, affecting the sale of such beverages and liquors if a license be granted to me.

Answer the following questions fully and completely: **PLEASE PRINT**

NAME Sally Rae Steinke
FIRST NAME MIDDLE NAME LAST NAME

Telephone Number (715) 308 3542 **Email address** sallysteinke@aol.com

Local Address E8584 State Rd 170 Colfax WI 54730
(Street) *(City)* *(Zip code)*

Permanent Address _____

Date of Birth 12/29/60 **Age** 56

Place of Employment Junction Liquor

I hereby authorize the Menomonie Police Department to furnish all information pertaining to my application for an operator's license to the licensing authorities of the City of Menomonie. This release is authorized with full understanding that the information will be safeguarded against unauthorized disclosure to any party not having a legitimate need for it in the property discharge of official business of the City of Menomonie.

I hereby release the City of Menomonie, its officers and employees from any liability for damages which may result to me on account of compliance with this authorization.

SIGNATURE OF APPLICANT

LICENSE FEE - **New license - $40.00** - **Code 19 - $30 license fee; Code 48 - $10.00 Investigation fee**
- **Renewal - $25.00** - **Code 19 - $15 license fee; Code 48 - $10.00 Investigation fee**

RECEIPT # 48114 PAID BY: APPLICANT or OTHER _____

BTC Completed _____ at _____ OR Renewal
Date Location or On-Line

For Office Use: (circle one)
Date Investigation Complete: 6-1-16 Approve Deny
Initials of Records Technician (or person who conducted investigation) BJM
Signature of Police Chief (or designated staff officer) _____

RECEIVED
JAN 27 2017
Village of Colfax

July 1, 2016 - June 30, 2017
Application for License to Serve Fermented Malt Beverages and Intoxicating Liquors

Fee - $10.00

To the Clerk of the Village of Colfax Wisconsin:

I hereby apply for a License to serve, from July 1, ~~2015~~ 2016 to June 30, ~~2016~~ 2017, inclusive (unless sooner revoked), Fermented Malt Beverages and Intoxicating Liquors, subject to the limitations imposed by Section 125.32(2) and 125.68 (2) of the Wisconsin Statutes and all acts amendatory thereof and supplementary thereto, and hereby agree to comply with all laws, resolutions, ordinances and regulations, Federal, State, or Local, affecting the sale of such beverages and liquors if a license be granted to me,

I certify that I am 43 years of age.

Davina L Brenden
Signature of Applicant

Answer the following questions fully and completely:

Name of Applicant Davina Brenden

Address of Applicant N8247 940th St Colfax WI 54730

Have you been convicted of any felony or of violating any law of the State of Wisconsin or of the United States?

No

Date of such conviction

Name of Court

Nature of offense

Have you been convicted or violating any license law or ordinance regulating the sale of beverages or intoxicating liquors?

No

Davina L Brenden
Signature of Applicant

STATE OF WISCONSIN,
Dunn County. ss.

Davina Brenden, being first duly sworn on oath says that he is the person who made and signed the foregoing application for an operator's license; that all the statements made by the applicant are true.

Subscribed and sworn to before me this 27th day of January 2017

Davina L Brenden
Applicant sign here

Sheila Riemer

Notary Public, Dunn County, Wis.

my comm expires 8-27-18

SHEILA RIEMER NOTARY PUBLIC STATE OF WISCONSIN

COLFAX POLICE DEPARTMENT

Village of Colfax P.O. Box 417 Colfax, Wisconsin 54730

Supplemental – General License Application

Instructions: Fill in all blanks, if a blank doesn't apply to your situation; fill in with "NA". A $5.00 Investigation Fee is due to the Village of Colfax when submitting this application. The Investigation Fee does not apply to: fermented beer, liquor, or on-off sale licenses. The fee, if applicable, will be instituted by the Village Clerk. Your receipt of this application will be accepted or denied within 72 hours (3 days) by the Colfax Police Department upon receipt of this application. This form is to be filled out in addition to any others required by the Village of Colfax. Any information on this application found to be false will be grounds for non-approval of this application.

NOTE: If any further explanation is needed, please continue on back of application.

Full Name-First, Middle, Last Davina Lynn Brenden

Business/Organization Name Buckshort Bar & Grill

Full Prior Names (nicknames, maiden names, etc. Davina Lynn VanWinkle, Davina Lynn Keller

Date of Birth _____ Place of Birth _____

Sex _____ Race _____ Height _____ Weight _____

Social Security No. _____ Driver's License No. _____

Have you ever been arrested for, or convicted of any laws, including traffic? NO

If yes, list offense, date and place occurring. _____

List prior addresses for the past five years N8247 940th St Colfax WI 54730

List three personal references, not related to you. Include name, address & phone number

1) Brenda Dahl
2) Trina Peterson
3) Penny

Have you ever been a member of the Military Service? NO Discharge? _____

Education- include name of High School, location, grade completed and any training beyond high school.

Riverdale High School Muscoda WI yrs 4yrs

I certify that I am familiar with the laws, ordinances and regulations, and hereby agree, if granted a license, to obey all provisions of such laws. I further certify that all information included in this application is true, accurate and complete to the best of my knowledge.

Signature Davina L Brenden Date 1-27-17

Official Use Only-Below This Line

Date Received 01/30/2017 Date Approved 01/31/2017 Date Denied _____

Researcher Chief of Police Approving Officer Signature [signature]

Serving Alcohol Operator License

License Code

tL1U8mpEzt

Verify online at servingalcohol.com

Serving Alcohol Inc.

Davina Brenden

has successfully completed the course

Wisconsin Alcohol Seller-Server

APPROVED BY THE STATE OF WISCONSIN SS-125.04; PROVIDER TRAINING IN COMPLIANCE WITH SS-134.66; STUDENT ACKNOWLEDGED UNDERSTANDING OF SS-134.88: Restrictions on sale or gift of cigarettes or tobacco products; that state law prohibits selling tobacco products to any person under the age of 18; and failure to comply with these restrictions may result in a citation.

PERSONS COMPLETING THIS COURSE HAVE AGREED TO EXECUTE THE FOLLOWING POLICIES TO THE BEST OF THEIR ABILITIES:

* CARD ANY PERSON 35 YEARS OF AGE OR YOUNGER
* OBSERVE AND REPORT ANY CUSTOMER SHOWING SIGNS OF POSSIBLE IMPAIRED BEHAVIOR
* RESPOND IMMEDIATELY TO ANY POSSIBLE PROBLEM SITUATIONS
* DETERMINE THAT PEOPLE ENTERING THE PREMISES TO CONSUME ALCOHOL ARE OF LEGAL ALCOHOL DRINKING AGE AND RECARD THEM IF THERE IS ANY QUESTION AS TO THEIR AGE
* ENSURE A PERSON MATCHES THEIR VALID LEGAL IDENTIFICATION

Certification Date

Jan 26th, 2017

CERTIFICATE IS VALID FOR THREE YEARS

Wisconsin Bartender License

Name: Davina Brenden

Certification Date: Jan 26th, 2017

Certificate Code: tL1U8mpEzt

Verify Online: servingalcohol.com

Complies with: SS-125.04 SS-134.66

Serving Alcohol Inc - Valid for 3 years

Village of Colfax

Box 417 - Colfax, Wisconsin 54730 – Phone 715-962-3311
Fax 715-962-2221

July 1, 2016 to June 30, 2017
License Application for
Keeping Domesticated Chickens
$10.00 (non-refundable application fee)

(please print)

1. Name of Applicant SARAH TEELE
2. Address 610 E River Street
3. Phone 920.371.5493
4. Parcel Number 111- N/A.
5. Number of female chickens (maximum 10) 6-10
6. Application (circle one) New Renewal

In submitting this application, I hereby agree to comply with the regulations imposed by the Village of Colfax Code of Ordinances. I understand the information requested on this form will be used by the Village of Colfax in the issuance of a license or processing of a renewal application. I understand the information supplied on this form will become public information when received by the Village of Colfax. I have no intention or agreement to transfer the license to another person or to allow any other entity to operate under the authority of the license. I hereby affirm that the foregoing statements are true and correct to the best of my knowledge and that I agree to comply with all the provisions of the Ordinance under which this license is granted.

Sarah Teele
Signature of Applicant

29 Jan 2017
Date

==========

Office use only

_____ Date Application Received

_____ Date Board Reviewed Application
Approved / Denied
_____ License Number

RECEIVED
JAN 30 2017
Village of Colfax

PROPOSAL

CROSS-CONNECTION CONTROL SERVICES

Village of Colfax

613 Main St

Colfax WI 54730

January 30, 2017

KEEPING DRINKING WATER SAFE FOR INDUSTRIES AND MUNICIPALITIES

For over 30 years, HydroCorp® has been dedicated to safe drinking water for companies and communities across North America. Fortune 500 firms, metropolitan centers, utilities, small towns and businesses – all rely on HydroCorp to protect their water systems, averting backflow contamination and the acute health risks and financial liabilities it incurs.

HYDROCORP

THE SAFE WATER AUTHORITY

Cross-Connection Control / Backflow Prevention

Water Meter Change Out & Installation Services

Legionella Prevention & Control

Water System Surveys / Flow Diagrams

Pipe System Mapping & Labeling

Regulatory Compliance Assistance / Documentation

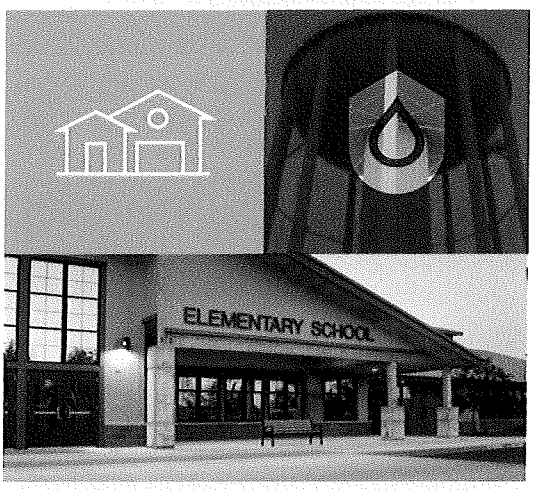

MIDWEST OFFICE
2665 S. Moorland Rd. Suite 209
New Berlin, WI 53151
800.315.4305 TOLL FREE
262.264.6402 PHONE

hydrocorpinc.com

PROJECT CONSULTANT: Tony Averbeck

608-234-2949 CELL

Table of Contents

1. WHY? 2
   1.1. NR 810.15 Cross Connections and Interconnections 2
   1.2. Definitions 3
   1.3. Common Cross-Connection Hazards 3
2. WHAT WE LOOK FOR AND DOCUMENT 3
   2.1. Cross-Connection Control Survey Data 3
   2.2. Sample Photo Illustrations 4
3. EXECUTIVE SUMMARY, PROJECT FEES/COST 5
4. APPENDIX 6
   4.1. The HydroCorp Promise 6
   4.2. Company Overview 6

1. WHY?

1.1. NR 810.15 Cross Connections and Interconnections

Unprotected cross-connections are prohibited. Cross-connections shall be protected as required in Chapter SPS 382.41.

(1) CROSS CONNECTION CONTROL PROGRAM. In order to protect the public water supply system, the water supplier for every municipal water system shall develop and implement a comprehensive cross connection control program for the elimination of all existing unprotected cross-connections and prevention of all future un-protected cross connections to the last flowing tap or end-use device. The program may include providing public education materials in lieu of inspections of low hazard portions of residential or commercial facilities. Low hazard areas consist of normal kitchen and bathroom fixtures. The water supplier shall keep a current record of the cross connection control program available for annual review by the department. The cross connection control program shall include:	**Requires Municipal Water Suppliers to have a Comprehensive Program**
(a) A complete description of the program and the administration procedures, including designation of the inspection or enforcement agency or agencies. (b) Local authority for implementation of the program, such as ordinance or other governing rule.	**Program must be documented and inspections on a time schedule**
(c) A time schedule for public education materials, surveys and follow up surveys of consumer premises for cross connections including appropriate record keeping. Unless otherwise authorized by the department, water suppliers for each municipal water system shall cause a survey to be conducted for every residential service a minimum of once every ten years or on a schedule matching meter replacement. Public educational materials, when being provided in lieu of low hazard inspections, shall be provided to the customer no less than every 3 years and with every cross connection survey. Unless a detailed alternative schedule is included in the cross connection control program and is approved by the department, water suppliers for each municipal water system shall cause a survey to be conducted for every industrial, commercial and public authority service a minimum of once every 2 years. Commercial properties of similar or lesser risk to residential properties may follow the same schedule as residential properties. Completed survey results shall be maintained by the water supplier until corrections and follow up surveys have been made.	**Inspection frequency (level of hazard) schedule must be authorized by DNR**
(d) A complete description of the methods, devices, and assemblies which will be used to protect the potable water supply. Compliant methods, devices and assemblies are listed in s. SPS 382.41.	**Must reference DSPS 382.41 Plumbing Code**
(e) Provisions for denial or discontinuance of water service, after reasonable notice, to any premises where an unprotected cross connection exists or where a survey could not be conducted due to denial. (f) Submission to the department of a copy of an ordinance establishing a cross connection control program, an annual report including a total number of all service connections by category, and a report indicating the number of surveys completed in each category for that year.	
(2) INTERCONNECTIONS WITH OTHER ACCEPTABLE WATER SOURCES. Interconnections between the public water supply system and another source of water are prohibited unless permitted by the department in individual cases. Approval of the department shall be obtained prior to the interconnection.	**All well to city water interconnections must be permitted individually by DNR**

1.2. Definitions

- Backflow – the undesirable reversal of flow of liquid, gas or other substance in a piping system.
- Backflow Preventer – an assembly, device, or method that prevents backflow.
- Cross-Connection – an actual connection or a potential connection between any part of a potable water system and any other environment that would allow substances to enter the potable water system.
- Cross-Connection Control – a program to eliminate cross-connections or to prevent them from causing a public health threat.
- Cross-Connection Control Survey – the review of the plumbing system to determine the existence of potential or actual cross-connections and to assess the degree of hazard of protected and unprotected cross-connections.

1.3. Common Cross-Connection Hazards

- Garden Hose connections with missing backflow preventers.
- Water Softener discharge lines directly connected to drain piping.
- Boilers with missing or inappropriate backflow preventers.
- Improperly installed or Backflow Prevention Assemblies missing test documentation.
- Toilets with faulty or unapproved anti-siphon fill valves.
- Lawn Irrigation systems with missing or inappropriate backflow preventers.
- Restaurant equipment connected to water supply with missing backflow preventers.
- Dental office equipment with missing backflow preventers.
- Fire Sprinkler systems with missing or inappropriate backflow preventers.
- Chemical mixing systems in janitorial closets with missing backflow preventers.

2. WHAT WE LOOK FOR AND DOCUMENT

2.1. Cross-Connection Control Survey Data

During the Cross Connection Control Survey, the Surveyor will observe common potable water piping connections such as boiler systems, water softeners and threaded hose bibs and other machines/systems connected to the drinking water supply. Each existing backflow preventer will be verified and documented for correct application.

Where unprotected Cross Connections are identified, the Surveyor will document the required corrective action and if possible, give a brief explanation to the occupant before leaving the premises. Common backflow preventers found within residences are described but not limited to the list and photo examples below:

2.2. Sample Photo Illustrations

1. **Lawn Sprinkler Backflow Preventers**
2. **Toilet Tank Anti-Siphon Valves**
3. **Boiler Backflow Preventer – High Hazard Type (RP)**
4. **Boiler Backflow Preventer – Low Hazard Type**
5. **Outside Hose Bibb Fixture**
6. **Standard Hose Bibb**
7. **Laundry Tub Threaded Fixture**
8. **Water Softener Back Flush Drain Hose**

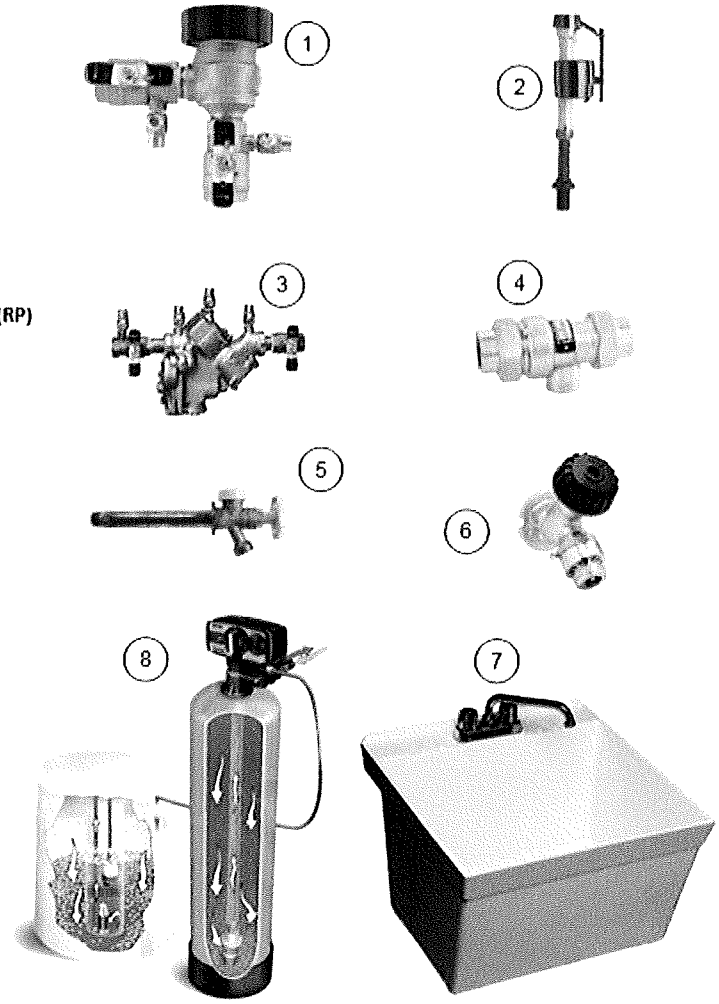

3. EXECUTIVE SUMMARY, PROJECT FEES/COST

Based on your current program, HydroCorp™ will provide the following services to the **Village of Colfax.** This project is a continued effort for an ongoing Cross-Connection Control Program and will provide the **Village of Colfax** with the necessary data and information to maintain compliance with the Wisconsin Department of Natural Resources (DNR) Cross-Connection Control Regulations (NR 810.15). The components of this project include:

A. Perform Cross-Connection Inspections at individual residential, commercial, industrial, and public authority users within the **Village of Colfax** served by the public water supply for cross-connections. Inspections will be conducted utilizing the isolation approach as supported with the Wisconsin Department of Safety & Professional Services Code Chapter SPS 382.

B. Complete **143** Cross-Connection Inspections of residential, commercial, industrial, public authority facilities during the contract period. Water purveyor and building owner will be provided with a detailed corrective action report for each non-compliant facility. Included in the inspections and price are all follow up compliance inspections to be performed by HydroCorp.

C. **Village of Colfax** will provide ASSE approved hose bibb vacuum breakers or anti-frost hose bibb vacuum breakers if required, in order to place a facility into immediate compliance at the time of inspection if no other cross-connections are identified.

D. Data management and program notices for all inspection services will be provided throughout the contract period using the HydroCorp Software Data Management Program. Toll free phone number to our inspection team office for questions from public and plumbers.

E. Submit computerized comprehensive management reports on a quarterly basis and conduct a compliance review meeting to discuss overall program status and recommendations. Records will also be accessible via secured website.

F. Review and update the cross-connection control ordinance and update the written cross-connection control plan specific to the **Village of Colfax** as required by Wisconsin Department of Natural Resources and the revised regulation NR 810.15.

G. HydroCorp Inc. will prepare the required DNR Annual Cross-Connection Control Report.

2 Year Cross-Connection Control Program:

49 Non-Residential CCC Inspections:	**$6,240.00**
94 Residential CCC Inspections:	**$5,664.00**

HydroCorp will invoice $11,904.00 in 24 monthly installment amounts of $496.00

Submitted by: HydroCorp – Midwest Regional Office| 2665 S. Moorland Rd., Suite 209 | New Berlin, WI 53151
Tony Averbeck | 608-234-2949 |tony@hydrocorpinc.com

Accepted by:

X _____ _____
City/Utility Representative (Signature) Date

_____
Printed Name / Title

4. APPENDIX

4.1. The HydroCorp Promise

HydroCorp is the Safe Water Authority.™ It is our duty to provide the most precise and comprehensive technical services in the industry. It also means delivering those services with expert knowledge, professionalism, and sensitivity to budgets and schedules – the highest standard of water safety oversight, combined with the highest value.

The Result – Your water system is compliant. Your risk and exposure are reduced. Your water – and your people – are protected.

4.2. Company Overview

- Founded in 1983 and incorporated in 1988.
- The firm has grown from two employees to a staff of over 50 full time associates in multiple states. Average tenure with the company is 7 years and employee turnover is less than 10%.
- HydroCorp Conducts over 30,000 on site, Cross-Connection Control Inspections ***annually.***
- HydroCorp provided Cross-Connection Control Program Management Services to over 240 communities in several states including: Michigan, Wisconsin, Delaware, Maryland, Virginia, Florida and Minnesota. We still have our first customer!
- Our highly trained staff works in an efficient manner in order to achieve maximum productivity and keep program costs affordable. We have a detailed **system** and **process** that each of our field inspectors follow in order to meet productivity and quality assurance goals.
- Our municipal inspection team is committed to providing outstanding customer service to the water users in each of the communities we serve. We teach and train customer service skills in addition to the technical skills since our team members act as representatives of the community that we service.
- Our municipal inspection team has attended training classes and received certification from the following recognized Cross Connection Control Programs: UF TREEO, UW-Madison, USC – Foundation for Cross Connection Control and Hydraulic Research, American Backflow Prevention Association (ABPA), and American Society for Sanitary Engineering (ASSE). We invest heavily in internal and external training with our team members to ensure that each Field Service and Administrative team member has the skills and abilities to meet the needs of our clients.
- Our administrative staff can answer most technical calls related to the cross-connection control program and have attended basic cross-connection control training classes.
- HydroCorp staff and company are active members in many water industry associations including:
    - American Water Works Association (AWWA) | AWWA – Wisconsin Chapter
    - National Rural Water Association (NRWA) | Wisconsin Rural Water Association
    - American Public Works Association (APWA)

PROFESSIONAL SERVICE AGREEMENT

This agreement, made and entered into this **March 1, 2017** by and between the **Village of Colfax** organized and existing under the laws of the State of Wisconsin, referred to as "Utility", and HydroCorp™ a Michigan Corporation, referred to as "HydroCorp".

WHEREAS, the Utility supplies potable water throughout its corporate boundary to property owners; and desires to enter into a professional services contract for cross connection control program inspection, reporting and management services.

WHEREAS, HydroCorp is experienced in and capable of supplying professional inspection of potable water distribution systems and cross connection control program management to the Utility and the Utility desires to engage HydroCorp to act as its independent contractor in its cross connection control program.

WHEREAS, the Utility has the authority under the laws of the State of Wisconsin and its local governing body to enter into this professional services contract.

NOW THEREFORE, in consideration of the mutual agreements herein contained, and subject to the terms and conditions herein stated, the parties agree as follows:

ARTICLE I. Purpose

During the term of this Agreement, the Utility agrees to engage HydroCorp as an independent contractor to inspect and document its findings on its potable water distribution system in public, commercial and industrial facilities within the community. Each party to this Agreement agrees that it will cooperate in good faith with the other, its agents, and subcontractors to facilitate the performance of the mutual obligations set forth in this Agreement. Both Parties to this Agreement recognize and acknowledge that the information presented to them is complete and accurate, yet due to the inaccessible nature of water piping or due to access constraints within water users' facilities, complete and accurate data is not always available.

ARTICLE II. Scope of Services

The scope of services to be provided by HydroCorp under this Agreement will include the inspections/surveys, program administration, answering telephone call inquires, scheduling of inspections, program compliance review, public education materials, preparation of quarterly management reports, and annual cross connection reports with respect to the facilities to the extent specifically set forth in this Article II (hereinafter the "Scope of Services"). Should other reports/services be included within the Scope of Services, the same shall be appended to this Agreement as Exhibit 1.

2.1 **PROGRAM REVIEW/PROGRAM START UP MEETING.** HydroCorp will conduct a Program Startup Meeting for the Cross-Connection Control/Backflow Prevention Program. Items for discussion/review will include the following:

- Review state & local regulations
- Review and/or provide assistance in establishing local Cross-Connection Control Ordinance
- Review/establish wording and timeliness for program notifications including:
  - Inspection Notice
  - Compliance Notice
  - Non-Compliance Notices 1-2, Penalty Notices
- Special Program Notices
- Electronic use of notices/program information
- Obtain updated facility listing, address information and existing program data from Utility
- Prioritize Inspections (City buildings, schools, high hazard facilities, special circumstances.)
- Review/establish procedure for vacant facilities

- Establish facility inspection schedule
- Review/establish procedures and protocol for addressing specific hazards
- Review/establish high hazard, complex facilities and large industrial facility inspection/containment procedures including supplemental information/notification that may be requested from these types of facilities in order to achieve program compliance.
- Review/establish program reporting procedures including electronic reporting tools
- Review/establish educational and public awareness brochures

2.2 **INSPECTIONS.** HydroCorp will perform initial inspections, compliance inspections, and re-inspections at individual residential, industrial, commercial, institutional facilities and miscellaneous water users within the utility served by the public water supply for cross-connections. Inspections will be conducted in accordance with Wisconsin Department of Natural Resources (DNR) Cross Connection Control Rules.

- *Initial Inspection* – the first time a HydroCorp representative inspects a facility for cross connections. Degree of Hazard will be assigned and/or verified during this facility visit. The Degree of Hazard will dictate future re-inspection frequency/schedule of facility, (facility will be either compliant or non-compliant after this inspection).
- *Compliance Inspection* – subsequent visit by a HydroCorp representative to a facility that was non-compliant during the *Initial Inspection* to verify that corrective action was completed and meets the program requirements.
- *Re-Inspection* – Revisit by a HydroCorp representative to a facility that was previously inspected. The re-inspection frequency/schedule is based on the degree of hazard assigned to the facility during the initial inspection (two, six or ten year re-inspection cycle).

2.3 **INSPECTION SCHEDULE.** HydroCorp shall determine and coordinate the inspection schedule. Inspection personnel will check in/out on a daily basis with the Utility's designated contact person. The initial check in will include a list of inspections scheduled. An exit interview will include a list of inspections completed.

2.4 **PROGRAM DATA.** HydroCorp will generate and document the required program data for the Facility Types listed in the Scope of Services using the HydroCorp Software Data Management Program. Program Data shall remain property of the Utility; however, the HydroCorp Software Data Management program shall remain the property of HydroCorp and can be purchased for an additional fee. Data services will include:

- Prioritize and schedule inspections
- Notify users of inspections, backflow device installation and testing requirements if applicable
- Monitor inspection compliance using the HydroCorp online software management program. (Note: WI Department of Safety & Professional Services (DSPS) manages backflow prevention assembly testing notification and compliance.)
- Maintain program to comply with all DNR regulations

2.5 **MANAGEMENT REPORTS.** HydroCorp will submit comprehensive management reports in electronic, downloadable format on a quarterly & annual basis to the Utility. Reports to include the following information:

- Name, location and date of inspections
- Number of facilities inspected/surveyed
- Number of facilities compliant/non-compliant

2.6 **REVIEW OF CROSS-CONNECTION CONTROL ORDINANCE.** HydroCorp will review or assist in the development of a cross-connection control ordinance. Items for review include:

- Code adoption references, standard operational procedures, program notice documentation, reporting procedures and preference standards.
- Penalties for noncompliance.

2.7 **VACUUM BREAKERS.** **Village of Colfax** will provide up to six (6) ASSE approved hose bill vacuum breakers or anti-frost hose bibb vacuum breakers per facility as required, in order to place a facility into immediate compliance at the time of inspection if no other cross-connections are identified.

2.8 **PUBLIC RELATIONS PROGRAM.** HydroCorp will assist the Utility with a community-wide public relations program including general awareness brochures and website cross connection control program content.

2.9 **SUPPORT.** HydroCorp will provide ongoing support via phone, fax, text, website or email for the contract period.

2.10 **FACILITY TYPES.** The facility types included in the program are as follows:

- Industrial
- Institutional
- Commercial
- Miscellaneous Water users
- Residential
- Multifamily

Complex Facilities. Large industrial and high hazard complexes or facilities may require inspection/survey services outside the scope of this Agreement. (HydroCorp typically allows a maximum of up to three (3) hours of inspection time per facility.) An independent cross connection control survey (at the business owner's expense) may be required at these larger/complex facilities and the results submitted to the Utility to help verify program compliance.

2.11 **INSPECTION TERMS.** HydroCorp will perform a minimum of **143** total inspections over a **2**-year contract period. The total inspections include all initial inspections, compliance and re-inspections. *Vacant facilities that have been provided to HydroCorp, scheduled no show or refusal of onsite inspection will count as an inspection/site visit for purposes of the contract.*

2.12 **COMPLIANCE WITH DEPARTMENT OF NATURAL RESOURCES ADMINISTRATIVE CODE.** HydroCorp will assist in compliance with DNR and Wisconsin Administrative Code cross connection control program requirements for all commercial, industrial, institutional, residential, multifamily and public authority facilities.

2.13 **POLICY MANUAL.** HydroCorp will review and/or develop a comprehensive cross connection control policy manual/plan and submit to WI-DNR for approval on behalf of the Utility.

2.14 **INVENTORY.** HydroCorp shall inventory all accessible (ground level) backflow prevention assemblies and devices. Documentation will include: location, size, make, model and serial number if applicable.

2.15 **DATA MANAGEMENT.** HydroCorp shall provide data management and program notices for all inspection services throughout the contract period.

2.16 **ANNUAL YEAR END REVIEW.** HydroCorp will conduct an on-site annual year-end review meeting to discuss overall program status and specific program recommendations.

2.17 **CROSS CONNECTION CONTROL BROCHURES.** HydroCorp will provide approximately **143** cross-connection control educational brochures for the duration of the Agreement.

2.18 **INSURANCE.** HydroCorp will provide all required copies of general liability, worker's compensation and errors and omissions insurance naming the Utility as an additional insured if required.

ARTICLE III. Responsibilities of the Utility

3.1 UTILITY'S REPRESENTATIVE. On or before the date services are to commence under this Agreement, the Utility shall designate an authorized representative ("Authorized Representative") to administer this Agreement.

3.2 COMPLIANCE WITH LAWS. The Utility, with the technical and professional assistance of HydroCorp, shall comply with all applicable local, state, and federal laws, codes, ordinances, and regulations as they pertain to the water inspection and testing, and shall pay for any capital improvements needed to bring the water treatment and delivery system into compliance with the aforementioned laws.

3.3 NOTICE OF LITIGATION. In the event that the Utility or HydroCorp has or receives notice of or undertakes the prosecution of any actions, claims, suits, administrative proceedings, investigations or other proceedings in connection with this Agreement, the party receiving such notice or undertaking of such prosecution shall give the other party timely notice of such proceedings and will inform the other party in advance of all hearings regarding such proceedings

3.4 FACILITY LISTING. The Utility must provide HydroCorp a complete list of facilities to be inspected, including facility name, type of service connection, address, contact person, and phone number, (if available). ***Electronic file format such as Microsoft Excel, etc. is required. An additional one-time fee to manually enter facility listing will be charged at the rate of $80.00 per hour. Incorrect facility addresses will be returned to the Utility contact and corrected address will be requested.***

3.5 LETTERHEAD/LOGO. The Utility will provide HydroCorp with an electronic file copy of the utility logo or utility letterhead and all envelopes for the mailing of all official program correspondence only. (300 dpi in either .eps, or other high quality image format for printing.)

ARTICLE IV. Term, Compensation and Changes in Scope of Services

4.1 TERM AND TERMINATION TERM. Services by HydroCorp under this Agreement shall commence on **March 1, 2017** and end **two (2)** year from such date, unless this Agreement is renewed or terminated as provided herein. The terms of this Agreement shall be valid only upon the execution of this Agreement within ninety (90) days of its receipt. Failure to execute this Agreement within the ninety (90) day period shall deem the proposed terms void.

4.2 RENEWAL. Upon the expiration of this Agreement the utility will have the option to renew under the same terms of this Agreement for two (2) consecutive one (1) year periods.

4.3 TERMINATION. The Utility or HydroCorp may terminate this Agreement at any time and on any date in the initial and renewal terms of this Agreement, with or without any cause, by giving written notice of such intent to terminate to the other party at least thirty (30) days prior to the effective date of termination. Notice of the intent to terminate shall be given in writing by personal service, by an authorized agent, or by certified mail, return receipt requested. The Utility shall pay the balance of any outstanding accounts for work performed by HydroCorp.

4.4 BASE COMPENSATION. From the Beginning thirty (30) days after execution of this Agreement, the Utility shall pay HydroCorp as compensation ("Base Compensation") for labor, equipment, material, supplies, and utilities provided and the services performed pursuant to this Agreement, the sum of **$496.00** per month, **$5,952.00** annually for a **two (2)** year contract period totaling **$11,904.00.**

4.5 PAYMENT OF INVOICES. Upon presentation of invoices by HydroCorp, all payments including base and other compensation shall be due and payable on the first day of each month (due date) after the month for which services have been rendered. All such payments shall be made no later than thirty (30) days after the due date. Failure to pay shall be deemed a default under this Agreement. For any payment to HydroCorp which is not made within thirty (30) calendar days after the due date, HydroCorp, shall receive interest at one and one-half (1½) percent per month on the unpaid balance.

4.6 CHANGES IN SCOPE OF SERVICES. In the event that the Utility requests and HydroCorp consents to perform additional work or services involving the consulting, management, operation, maintenance, and repair of the Utility's water delivery system where such services or work exceeds or changes the Scope of Services contemplated under this Agreement, HydroCorp shall be provided additional compensation. Within thirty (30) calendar days from the date of notice of such additional work or services, the parties shall mutually agree upon an equitable sum for additional compensation. This amount shall be added to the monthly sum effective at the time of change in scope. Changes in the Scope of Service include, but are not limited to, requests for additional service by the Utility or additional costs incurred in meeting new or changed government regulations or reporting requirements.

4.7 CLIENT CONFIDENTIALITY. Disclosure of all communications between HydroCorp and the Utility regarding business practices and other methods and forms of doing business is subject to the provisions of Wisconsin Public Records Law, Chapter 19, Wis. Stats. HydroCorp agrees to make available for inspection and copying all records (as defined in sec. 19.32 (2), Wis. Stats.) in its possession created, produced, collected or otherwise related to this Agreement to the same extent as if the records were maintained by the Utility. HydroCorp expressly acknowledges and agrees that its obligations concerning Public Records Law and compliance under this Agreement should not be limited by copyright, license, privacy and/or confidentiality except as authorized under the Public Records Law.

4.8 ACCESSIBILITY. Backflow prevention device information will be completed in full only when the identifying information (i.e. data plate, brass tag, etc.) is accessible and visible from ground level or from a fixed platform/mezzanine.

4.9 CONFINED SPACES. – HydroCorp personnel will not enter confined spaces.

ARTICLE V. Risk Management and General Provisions

5.1 INFORMATION. Both Parties to this Agreement recognize and acknowledge that the information presented to them is complete to the best of their knowledge, yet due to the inaccessible nature of water piping or lack of access provided by property owner/water user, complete accurate data is not always available. Cross-connection control inspection and results are documented as of a specific date. The property owner and/or water user may make modifications to the potable water system after the inspection date that may impact compliance with the program.

5.2 LIMITATION OF LIABILITY. HydroCorp liability to the Utility for any loss, damage, claim, or expense of any kind or nature caused directly or indirectly by the performance or non-performance of obligations pursuant to this Agreement shall be limited to general money damages in an amount not to exceed or within the limits of the insurance coverage provided hereunder. HydroCorp shall in no event be liable for indirect or consequential damages, including but not limited to, loss of profits, loss of revenue, or loss of facilities, based upon contract, negligence, or any other cause of action.

5.3 HYDROCORP INSURANCE. HydroCorp currently maintains the following insurance coverage's and limits:

	Occurrence	Aggregate
Comprehensive General Liability	$1 Million	$2 Million
Excess Umbrella Liability	$5 Million	$5 Million
Automobile Liability (Combined Single Limit)	$1 Million	
Worker's Compensation/ Employer's Liability	$1 Million	
Errors and Omissions	$2 Million	$2 Million

Within thirty (30) calendar days of the start of the project, HydroCorp shall furnish the Utility with satisfactory proof of such insurance, and each policy will require a 30-day notice of cancellation to be given to the Utility while this Agreement is in effect. The Utility shall be named as an additional insured according to its interest under the general liability policy during the term of this Agreement.

5.4 **UTILITY INSURANCE.** The Utility will maintain liability insurance on an all risk basis and including extended coverage for matters set forth in this Agreement.

5.5 **RELATIONSHIP.** The relationship of HydroCorp to the Utility is that of independent contractor and not one of employment. None of the employees or agents of HydroCorp shall be considered employees of the Utility. For the purposes of all state, local, and federal laws and regulations, the Utility shall exercise primary management, and operational and financial decision-making authority.

5.6 **ENTIRE AGREEMENT AMENDMENTS.** This Agreement contains the entire Agreement between the Utility and HydroCorp, and supersedes all prior or contemporaneous communications, representations, understandings, or agreements. This Agreement may be modified only by a written amendment signed by both parties.

5.7 **HEADINGS, ATTACHMENTS, AND EXHIBITS.** The heading contained in this Agreement is for reference only and shall not in any way affect the meaning or interpretation of this Agreement. The Attachments and Exhibits to this Agreement shall be construed as integral parts of this Agreement.

5.8 **WAIVER.** The failure on the part of either party to enforce its rights as to any provision of this Agreement shall not be construed as a waiver of its rights to enforce such provisions in the future.

5.9 **ASSIGNMENT.** This Agreement shall not be assigned by either party without the prior written consent of the other unless such assignment shall be to the affiliate or successor of either party.

5.10 **FORCE MAJEURE.** A party's performance under this Agreement shall be excused if, and to the extent that, the party is unable to perform because of actions due to causes beyond its reasonable control such as, but not limited to, Acts of God, the acts of civil or military authority, loss of potable water sources, water system contamination, floods, quarantine restrictions, riot, strikes, commercial impossibility, fires, explosions, bombing, and all such interruptions of business, casualties, events, or circumstances reasonably beyond the control of the party obligated to perform, whether such other causes are related or unrelated, similar or dissimilar, to any of the foregoing. In the event of any such force majeure, the party unable to perform shall promptly notify the other party of the existence of such force majeure and shall be required to resume performance of its obligations under this Agreement upon the termination of the aforementioned force majeure.

5.11 **AUTHORITY TO CONTRACT.** Each party warrants and represents that it has authority to enter into this Agreement and to perform the obligations, including any payment obligations, under this Agreement.

5.12 **GOVERNING LAW AND VENUE.** This Agreement shall be governed by and construed in accordance with the laws of the State of Wisconsin, regardless of the fact that any of the parties hereto may be or may become a resident of a different state or jurisdiction. Any suit or action arising shall be filed in a court of competent jurisdiction within the State of Wisconsin, venue by the presiding County. The parties hereby consent to the personal jurisdiction of said court within the State of Wisconsin

5.13 **COUNTERPARTS.** This Agreement may be executed in any number of counterparts, each of which shall be deemed to be an original and all of which together shall be deemed to be one and the same instrument.

5.14 **NOTICES.** All notices, requests, demands, payments and other communications which are required or may be given under this Agreement shall be in writing and shall be deemed to have been duly given if delivered personally or sent by nationally recognized overnight carrier, or mailed by certified mail, postage prepaid, return receipt requested, as follows:

If to HydroCorp:

HydroCorp
c/o John Hudak
5700 Crooks Road, Ste. 100
Troy, MI 48337
(248) 250-5005

If to Utility:

Village of Colfax
613 Main St
Colfax WI 54730

5.15 **SEVERABILITY.** Should any part of this Agreement for any reason, be declared invalid or void, such declaration will not affect the remaining portion, which will remain in full force and effect as if the Agreement has been executed with the invalid portion eliminated.

SIGNATURES

IN WITNESS WHEREOF, the parties have duly executed this Agreement effective as of the date first above written.

Village of Colfax

_____

By:
Title:

HydroCorp

_____

By: John Hudak
Its: President

Appendix

Specific Qualifications & Experience

HydroCorp™ is a professional service organization that specializes in Cross Connection Control Programs. Cross Connection Control Program Management & Training is the main core and focus of our business. We are committed to providing water utilities and local communities with a cost effective and professionally managed cross connection control program in order to assist in protecting the public water supply.

- HydroCorp conducts over 30,000 Cross Connection Control Inspections ***annually***.
- HydroCorp tracks and manages over 35,000+ backflow prevention assemblies for our Municipal client base.
- Our highly trained staff works in an efficient manner in order to achieve maximum productivity and keep program costs affordable. We have a detailed **system** and **process** that each of our field inspectors follow in order to meet productivity and quality assurance goals.
- Our municipal inspection team is committed to providing outstanding customer service to the water users in each of the communities we serve. We teach and train customer service skills in addition to the technical skills since our team members act as representatives of the community that we service.
- Our municipal inspection team has attended training classes and received certification from the following recognized Cross Connection Control Programs: UF TREEO, UW-Madison, and USC – Foundation for Cross Connection Control and Hydraulic Research, American Backflow Prevention Association (ABPA), American Society for Sanitary Engineering (ASSE). HydroCorp recognizes the importance of Professional Development and Learning. We invest heavily in internal and external training with our team members to ensure that each Field Service and Administrative team member has the skills and abilities to meet the needs of our clients.
- We have a trained administrative staff to handle client needs, water user questions and answer telephone calls in a professional, timely and courtesy manner. Our administrative staff can answer most technical calls related to the cross connection control program and have attended basic cross connection control training classes.
- HydroCorp currently serves over 200 communities in Michigan, Wisconsin, Maryland, Delaware, Virginia & Florida. We still have our first customer!
- HydroCorp and its' staff are active members in many water industry associations including: National Rural Water Association, State Rural Water Associations, National AWWA, State AWWA Groups, HydroCorp is committed to assisting these organizations by providing training classes, seminars and assistance in the area of Cross Connection Control.
- Several Fortune 500 companies have relied on HydroCorp to provide Cross Connection Control Surveys, Program Management & Reporting to assist in meeting state/local regulations as well as internal company guidelines.

POOLED CHECKING ACCOUNT Accounting Checks

Posted From: 1/23/2017 From Account:
Thru: 2/12/2017 Thru Account:

Check Nbr	Check Date	Payee	Amount
UHC	2/06/2017	UHS PREMIUM BILLING	977.72
73593	1/25/2017	LINCOLN BENEFIT LIFE	7,570.42
73594	1/25/2017	VFIS	830.00
73595	1/31/2017	24-7 TELCOM	24.95
73596	1/31/2017	AMERICAN DIVERSITY	107.82
73597	1/31/2017	ARAMARK UNIFORM SERVICE, INC	51.16
73598	1/31/2017	BOBCAT PRO	200.00
73599	1/31/2017	CENTURY LINK	45.11
73600	1/31/2017	CITY OF EAU CLAIRE	495.75
73601	1/31/2017	COLFAX RESCUE SQUAD	18,158.91
73602	1/31/2017	DAVE HOVRE	120.00
73603	1/31/2017	DIGGERS HOTLINE	174.40
73604	1/31/2017	DUNN COUNTY RECYCLING	1,362.40
73605	1/31/2017	FIRST SUPPLY LLC-EAU CLAIRE	600.88
73606	1/31/2017	GRAINGER	22.73
73607	1/31/2017	HENRY SCHEIN	798.18
73608	1/31/2017	HUEBSCH	209.72
73609	1/31/2017	INDIANHEAD TRUCK EQUIPMENT/NAPA	3.99
73610	1/31/2017	MISSISSIPPI WELDERS SUPPLY CO.	202.50
73611	1/31/2017	MODERN MARKETING	378.93
73612	1/31/2017	NEWMAN TRAFFIC SIGNS	85.99
73613	1/31/2017	ONE SOURCE IMAGING	221.50
73614	1/31/2017	PURCHASE POWER	520.99
73615	1/31/2017	SPECTRUM	10,333.00
73616	1/31/2017	TELEDYNE ISCO	470.29
73617	1/31/2017	WAL MART COMMUNITY/GECRB	27.80
73618	1/31/2017	WELD RILEY	112.00
73619	1/31/2017	WI DEPARTMENT OF REVENUE	155.52
73620	1/31/2017	WILLIAM ANDERSON	24.75
73621	1/31/2017	XCEL ENERGY/SITING & LAND RIGHTS	30.00
73622	1/31/2017	ZEMPEL APPRAISAL SERVICE	959.84
73623	1/31/2017	ZOLL MEDICAL CORP	236.24
73624	2/02/2017	WI SCTF	63.62

POOLED CHECKING ACCOUNT

Accounting Checks

Posted From: 1/23/2017 From Account:
Thru: 2/12/2017 Thru Account:

Check Nbr	Check Date	Payee	Amount
AFLAC	1/27/2017	AFLAC	298.38
EFTPS	1/26/2017	EFTPS-FEDERAL-SS-MEDICARE	5,158.81
EFTPS	2/09/2017	EFTPS-FEDERAL-SS-MEDICARE	5,270.67
WIDOR	1/26/2017	WI DEPARTMENT OF REVENUE	829.27
WIDOR	2/09/2017	WI DEPARTMENT OF REVENUE	867.63
AMAZON	1/25/2017	AMAZON.COM	597.70
AMAZON	1/25/2017	AMAZON.COM	-597.70
AMAZON	1/25/2017	AMAZON.COM	597.70
BREMER	2/10/2017	CARDMEMBER SERVICE	1,405.20
PITNEY	1/27/2017	PITNEY BOWES INC	67.65
CHARTER	1/28/2017	CHARTER COMMUNICATIONS	513.16
WIDCOMP	1/26/2017	WISCONSIN DEFERRED COMPENSATION	155.00
WIDCOMP	2/09/2017	WISCONSIN DEFERRED COMPENSATION	155.00
XCELENERGY	1/31/2017	XCEL ENERGY	4,870.65
		Grand Total	65,766.23

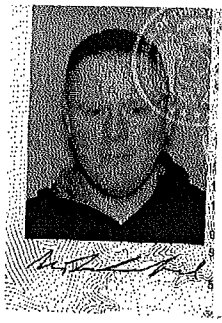

APPLICATION FOR COMMUNITY USE OF VILLAGE FACILITIES

Any person or organization intending to rent the fairground buildings or other park grounds must submit their rental agreement and payments at least fifteen (15) days prior to using the facilities. This will be handled the same as the Class B Picnic License, requiring approval by the Village Board.

Name of Renter or Organization: Rep. Rob Summerfield

Activity: Budget Listening Session

Date of Use 2/20/17 Circle ALL Days: FRI. SAT. SUN. (MON.) TUES. WED. THURS.

Time of Use: From 2:30 AM/(PM) To 4:00 AM/(PM)

Facility to be Used: FAIRGROUNDS and/or (BUILDINGS, MUNICIPAL BLDG.) PARKS

Type of Event: Thrift Sale Ball Game Wedding Reunion Concert

Non-Profit: Civic Church Charity Other: Listening Session

Brief Description of activity: Free & open to the public. An opportunity for constituents in the area to voice questions or concerns about the Governor's budget directly to their State Rep.

THE RENTER OR ORGANIZATION AGREES TO THE FOLLOWING RULES:

1.) The individual listed as renter must be a minimum of 21 years of age and will be responsible for the rules, supervision and proper conduct of all persons using the facility.
2.) The renter shall be responsible for damage, loss, and/or breakage of Village property.
3.) All property belonging to the activity must be removed at the close of the event, **including garbage**.
4.) Any property belonging to the Village shall not be removed from the premises.
5.) Where permitted by law, the applicant shall agree to indemnify, save and hold free and harmless, the Village of Colfax, their officers, agents, and employees, from and against all claims, demands, loss, liability, cost or expense of any kind or nature whatsoever which the Village of Colfax, their officers, agents or employees, or any of them may sustain or incur, or that may be imposed upon any of them, or injury to, or death of, persons or damages to property arising out of, connected with, or attributable to the rental, use and occupancy of the Village Facilities as provided herein.

Individual responsible Rep. Rob Summerfield

Date 02/07/2017

Address State Capitol, Room 7 West, Madison, WI 53708

Phone number 608-266-1194 (office)

Phone Number for Weekend Contact 715-379-7910 (Summerfield cell); 262-880-7340 (Staffer cell)

Form of Identification

Village Clerk or Deputy Clerk

Date

Administrator-Clerk-Treasurer Report
February 7, 2017

Marshfield Clinic Update – I hope to hear from Marshfield Clinic in the next week or so. I am very hopeful that we hear positive news.

Village Clerk's Office – Crazy next week – year-end ~ ~ ~ election preparation.

Police Patrol Officer Position – The Chief and I are in the process of reviewing applications and setting up interviews.

Audit dates - April 22 through 24, 2017

2017 Elections
Public Test, Training and Nursing Home voting all will take place this week.
February 20, 2017 is set-up for elections.
February 21, 2017 is the spring Primary election. Polls are open from 7 a.m. to 8 p.m.
There is a sample ballot online.

PSC application for Non-Routine Meter Replacement – Randy and I have submitted the application to the Public Service Commission. Per a phone call with them, they indicated that the process has been taking approximately 60 days. We are hopeful that we will received positive communications before April 15, 2017.

PUBLIC WORKS TASK LIST

DON

Check Streets

Read Wells

Jet Sewers

Plow Snow-End Loader

Sand Streets

Maintain Vehicles

Ball Field Irrigation

Skate Rink-Maintenance

Head Hole Patcher

Alley Maintenance

Lawn Mower Maintenance

Street Sign Replacement

Pot Hole Patrol

TIM

Garbage-Main Street

Garbage-Parks

Dog Waste Bags

Ball Field Bathrooms

Fairground Bathrooms

Lift Station Waste

Jet Sewers

Tower Park Mowing

Weed Whip

Water Meter Reads

Utility Locates

Lagoon Samples

Shovel & Salt Village Hall

Shovel & Salt Bridge Walk